REVISION RECORD			
LTR	ECO NO:	APPROVED:	DATE:

GPS

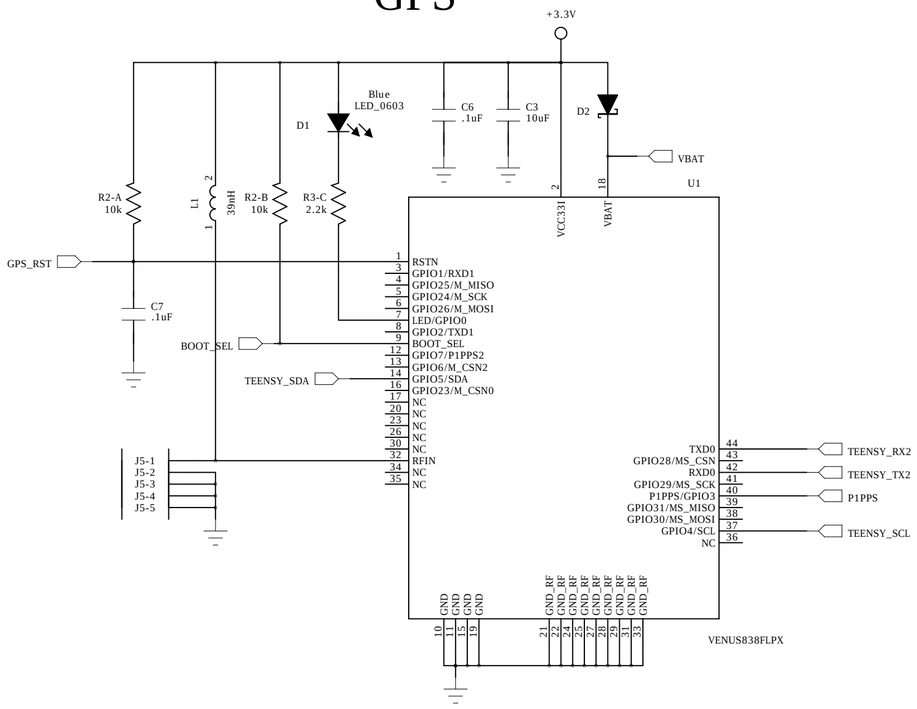

CAN Bus

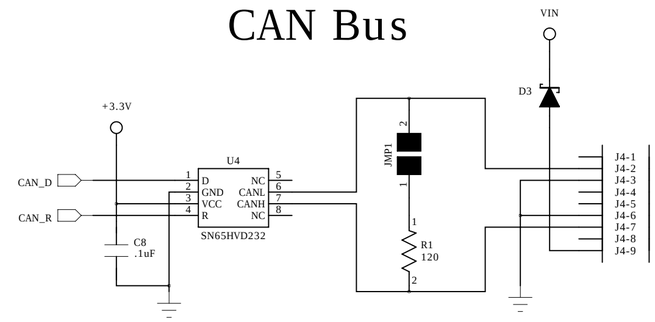

MicroSD Card

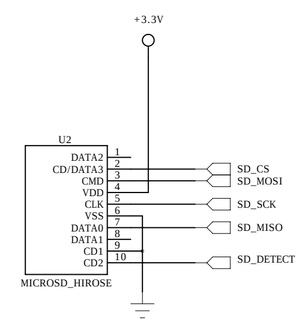

Intertial Module

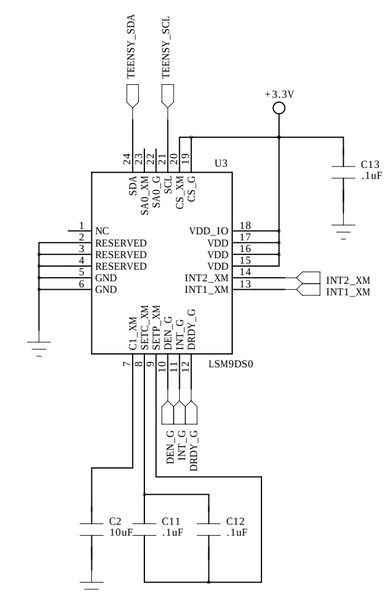

Teensy Interface

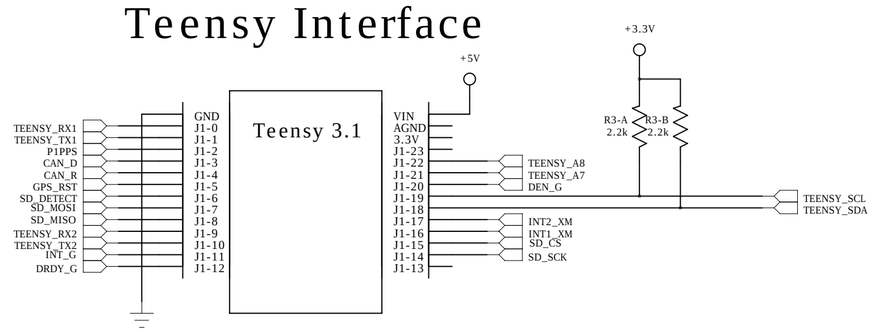

User I/O

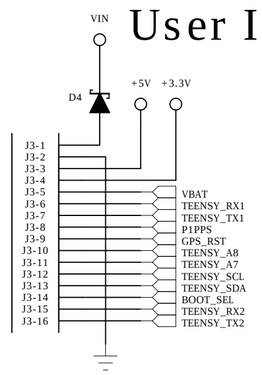

Power

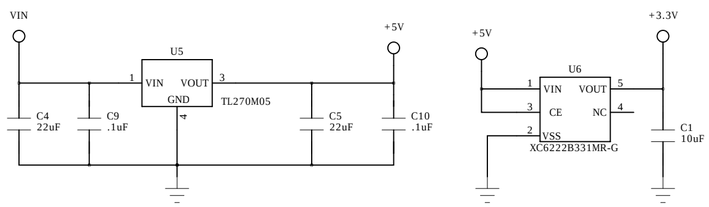

This work is licensed under a Creative Commons Attribution-ShareAlike 3.0 Unported License.
http://www.creativecommons.org/licenses/by-sa/3.0/

open hardware

DRAWN: Kelly	DATED: 08/08/2015	COMPANY: Smoking Resistor			
CHECKED: KC	DATED: 08/08/2015	TITLE: Teensy 3.x GPS Shield			
QUALITY CONTROL: QC	DATED: 08/08/2015	CODE:	SIZE: C	DRAWING NO: SR1011	REV: 1.1
RELEASED: SmokingResistor	DATED: 08/08/2015	SCALE: <Scale>		SHEET: 1 OF 1	